INTERNATIONAL ISLAMIC UNIVERSITY CHITTAGONG

Course Code : EEE-2422
Course Title : Electrical Drives and Instrumentation Lab.

Project Proposal on Motion Detector Alarm System.

Submitted By

Name : Sheikh Kohinoor Rahman Dipu.
ID : C241001
Section : 5AM
Semester : 5th
Department : Computer Science & Engineering.

Submitted To
SAIF SABBIR
Lecturer, Department of Computer Science & Engineering
International Islamic University Chittagong

Date of Submission : 06.05.2026

ABSTRACT :

The Motion Detector Alarm System is a smart security project developed using Arduino Uno R3 and a PIR sensor. The system detects human movement by sensing changes in infrared radiation. When motion is detected, the PIR sensor sends a signal to the Arduino, which activates a buzzer and an LED as an alert.The main objective of this project is to create a low-cost, simple, and effective security system for homes, offices, and restricted areas. This project provides an easy and reliable solution for motion detection and helps improve safety and monitoring efficiency.

INTRODUCTION :

Security is very important in homes, offices, and restricted areas. Traditional security systems are often expensive and difficult to use. So, a simple and low-cost security system is needed.This project is a Motion Detector Alarm System using Arduino Uno R3 and a PIR sensor. The PIR sensor detects human movement and sends a signal to the Arduino. Then, the Arduino turns on the buzzer and LED as an alert.This system is useful for improving security and preventing unauthorized access. It is simple, reliable, and suitable for home and office security applications.

PROBLEM STATEMENT :

Unauthorized access and security threats are common concerns in homes, offices, and restricted areas. Traditional security systems are often expensive, complex, and difficult to maintain. Many people cannot afford advanced security solutions for basic protection.Therefore, there is a need for a simple, low-cost, and reliable motion detection system that can detect human movement and provide an immediate alert. This project aims to solve this problem by developing an efficient Motion Detector Alarm System using Arduino Uno and a PIR sensor.

OBJECTIVES :

The main objectives of this project are :

- To design and develop a motion detection system using Arduino Uno R3.
- To detect human movement using a PIR sensor.
- To activate a buzzer and LED as an alert system when motion is detected.
- To build a simple, low-cost, and reliable security solution.
- To demonstrate the practical application of embedded systems in security systems.

LITERATURE REVIEW :

Motion detection systems are widely used in modern security applications to detect unauthorized movement and trigger alarms. Various studies and projects have shown that Passive Infrared (PIR) sensors are commonly used for detecting human presence by sensing infrared radiation emitted from the body.Arduino-based security systems have gained popularity due to their simplicity, low cost, and flexibility. Researchers have developed different motion detection systems using Arduino Uno combined with sensors such as PIR, ultrasonic, and infrared sensors. Among them, PIR sensor-based systems are most effective for human motion detection because of their accuracy and low power consumption.

Previous projects also show that combining Arduino with simple output devices like LEDs and buzzers can create efficient and affordable alarm systems for basic security needs. This project follows the same concept and improves it by integrating a reliable motion detection mechanism for practical use in real-life environments.

METHODOLOGY :

The development of the Motion Detector Alarm System is carried out through both hardware and software implementation. First, all required components such as Arduino Uno R3, PIR sensor, LED, buzzer, resistors, and jumper wires are selected and connected properly on a breadboard according to the circuit design.

After completing the hardware setup, the Arduino is programmed using the Arduino IDE. The program is written in such a way that the PIR sensor continuously checks for motion. When motion is detected, the Arduino processes the signal and activates the LED and buzzer as an alert system.

Finally, the system is tested in different environments to ensure proper functionality. Adjustments are made in the code and sensor sensitivity if needed to improve accuracy and performance.

SYSTEM COMPONENTS :

The Motion Detector Alarm System is built using both hardware and software components. Each component plays an important role in the proper functioning of the system.

Hardware Components:

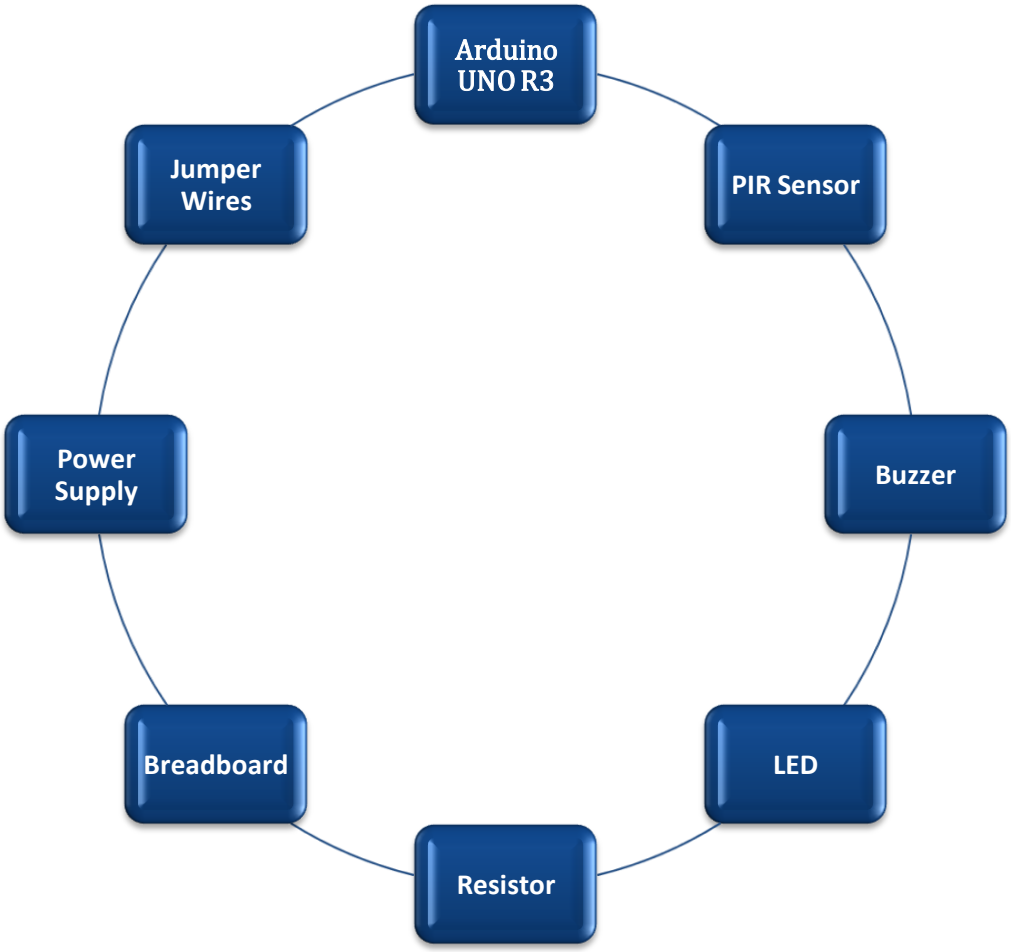

- **Arduino Uno R3** – Acts as the main controller of the system.
- **PIR Sensor** – Detects human motion by sensing infrared radiation.
- **LED** – Indicates motion detection visually.
- **Buzzer** – Produces sound alarm when motion is detected.
- **Resistors** – Used to control current flow.
- **Breadboard** – Used for assembling the circuit without soldering.
- **Jumper Wires** – Used for connecting different components.
- **Power Supply** – Provides required power to the system.

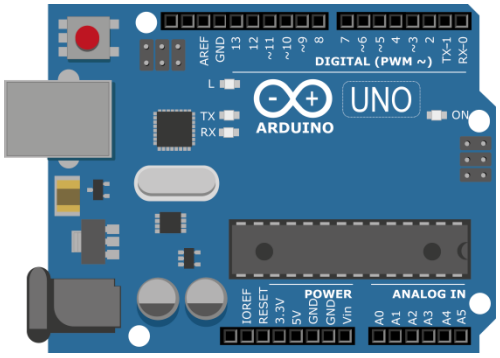

Figure 01 : Arduino UNO R3

Figure 02: PIR Sensor

Figure 03: Buzzer

Software Components:

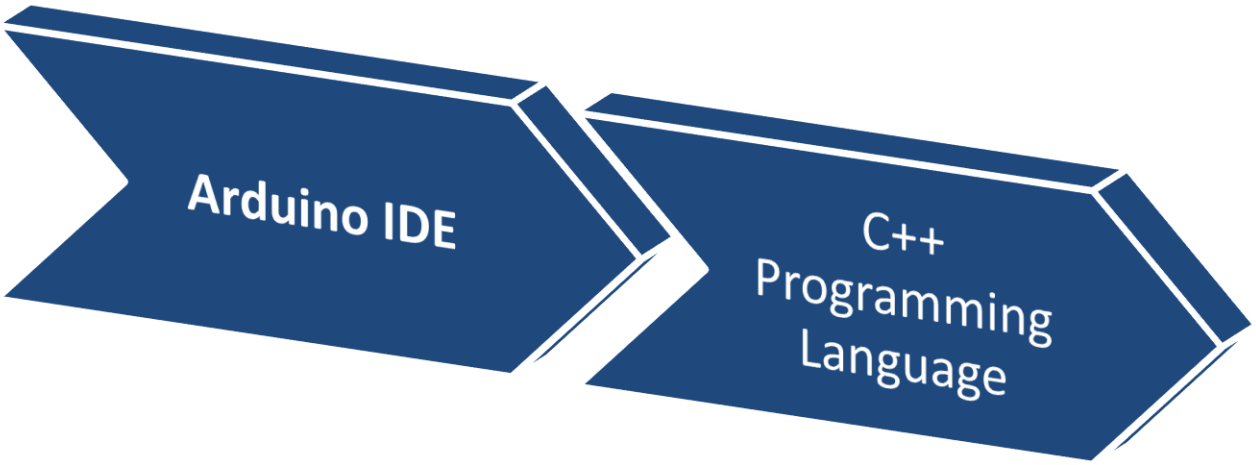

- **Arduino IDE** – Used for writing, compiling, and uploading the program to Arduino Uno.
- **C++ Programming Language** – Used for coding the system logic and controlling the behavior of the Arduino-based motion detection system.

SYSTEM DESIGN :

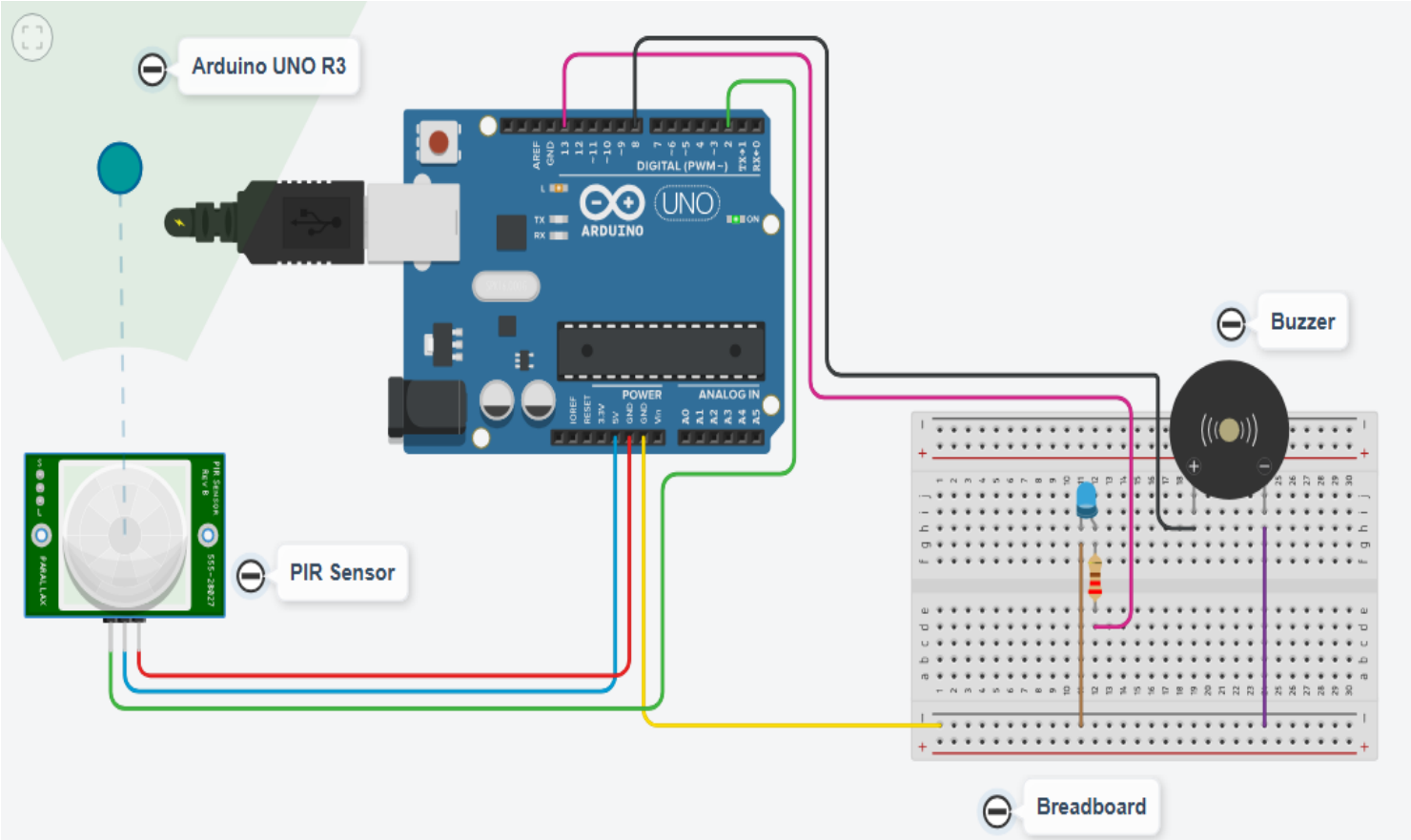

Figure 04 : System Design of Motion Detector Project.

WORKING PRINCIPLE :

The system works by detecting human movement using a PIR sensor. The sensor continuously monitors the surrounding area and detects changes in infrared radiation caused by motion.When motion is detected, the PIR sensor sends a signal to the Arduino Uno. The Arduino then processes the signal and activates the buzzer and LED as an alert. If no motion is detected, the system remains inactive. This provides a simple and real-time motion detection and alarm response system.

EXPECTED OUTCOME :

- The system will successfully detect human motion using a PIR sensor.
- The Arduino will process the sensor signal in real time.
- The buzzer and LED will activate immediately when motion is detected.
- The system will provide accurate and low-delay alert response.
- The overall system will be simple, low-cost, and suitable for basic security applications such as homes and offices.

ADVANTAGES :

- This system is low-cost, simple, and easy to build using basic components.
- It provides real-time motion detection with instant alarm response through buzzer and LED.
- It is energy efficient, easy to install, and suitable for home and office security applications.

APPLICATIONS :

- Used in home security systems to detect intruders.
- Applicable in office and commercial building security.
- Useful for warehouse and restricted area monitoring.
- Can be used in smart security and automation systems.

BUDGET ESTIMATION :

Components	Quantity	Estimated Cost(BDT)
PIR Sensor	1	120 – 200
Arduino UNO R3	1	600-900
LED	1–2	10 – 20
Buzzer	1	20 – 50
Resistors	Few	10 – 20
Breadboard	1	100 – 150
Jumper Wires	Set	50 – 100
Power Supply	1	100 – 200
Transport Cost	1	300

Total Estimated Cost: 1300 – 1800 BDT (approx.)

TIMELINE :

Task	Duration
Requirement Analysis & Planning	1 Day
Circuit Design	1 Day
Hardware Setup	2 Days
Programming (Arduino IDE)	1 Day
Testing & Debugging	3 Days
Final Report Preparation	3 Days

Total Duration: Approximately 11 Days

CONCLUSION :

The Motion Detector Alarm System is an effective and low-cost security solution developed using Arduino Uno R3 and a PIR sensor. The system is capable of detecting human motion in real time and providing an immediate alert through a buzzer and LED indication.

This project demonstrates the practical use of embedded systems in real-life security applications. It is simple to design, easy to install, and reliable for basic monitoring purposes in homes, offices, and restricted areas.

Overall, the system achieves its objective of providing a fast and efficient motion detection mechanism while maintaining low cost and simplicity. It can also be further improved and expanded for advanced security applications in the future.

REFERENCES :

- Arduino Official Documentation – https://www.arduino.cc
- PIR Sensor Datasheet (HC-SR501) – Manufacturer Technical Datasheet.
- Arduino IDE User Guide – Arduino Software Documentation.
- Electrical Drives and Instrumentation Lab Lecture Notes.